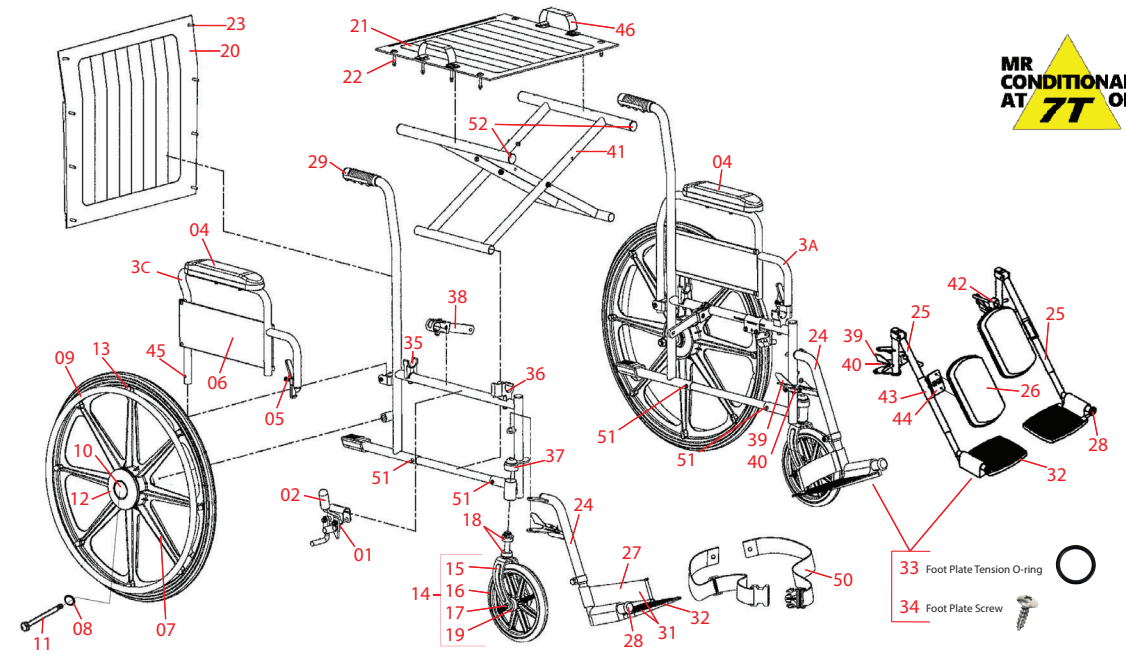

MR CONDITIONAL AT 7T OR LESS

18" Wide Stainless Steel

WCM1827SD27
WCM1877SD27
WCM1827SD50
WCM1877SD50
WCM1827SD02
WCM1877SD02

Fig	Model	Description	Page
01	BR8006L-01 BR8006R-01	Brake Complete, Left * Brake Complete, Right *	8 8
02	BR8007X-01	Rubber Tip for Brake	9
3A	AR2604L-01-CL	Flip Back Left Side Desk Length Arm, Complete with skirtguard, armrest & button lock, Color * **	11
3C	AR2604R-01-CL	Flip Back Right Side Desk Length Arm, Complete with skirtguard, armrest & button lock, Color * **	11
04	AR2204X-01-CL	Desk Length Armrest,Color **	12
05	CA8008X-01	Release Lever	12
06	AR3052X-01	Skirtguard 13 1/4" x 4 3/4"	12
07	WH1224X-01	24" Wheel Complete with 7/16" Bearings, Handrim & Hub Cap	5
08	HW9216X-01	Washer, for Rear Axle	7
09	WH6029X-01	Stainless Steel Handrim	7
10	BE1014X-01	7/16" Bearing for Rear Wheel	3
11	WH6109X-01	Axle and Nut for Rear Wheel	8
12	CA3024X-01	Hub Cap	9
13	HW9213X-01	Handrim Screws & Spacers (set of 8)	7
14	WH3106X-01	8" Fork Assembly (fork, 8" wheel, bearings & axle)	6
15	WH9109X-01	Fork with Nut	6
16	WH3107X-01	8" Wheel with Bearings	5
17	HW6108X-01	Axle and Nut for Front Wheel	8
18	BE2019X-01	Bearing for Fork Stem	4
19	BE1012X-01	Bearing for Front Wheel	4
20	UP1310X-01-CL	Back Upholstery w/Hardware **	17
21	UP0310X-01-CL	Seat Upholstery w/Hardware **	17
22	UP1220X-01	Seat Attaching Hardware Set	19
23	UP1222X-01	Back Attaching Hardware Set	19

* Determine Left or Right when sitting in the wheelchair
** Upholstery Colors: 22-Burgundy, 50-Green, 02-Dk. Blue

Fig	Model	Description	Page
24	FR3104L-01 FR3104R-01	Footrest Complete Left Side * Footrest Complete Right Side *	13 13
25	LR3104L-01-CL LR3104R-01-CL	Legrest Complete Left, Color * ** Legrest Complete Right, Color * **	14 14
26	LR3108-01-22	Calf Pad, Color **	14
27	AC1506X-01	Heel Loop with Hardware	23
28	CA8016X-01	Bumper	9,16
29	CA8007X-01	Handle Grip	9
30	CA8006X-01	Kick Tube Cap	9
31	FR3109L-01 FR3109R-01	Foot Plate w/Heel Loop, Left * Foot Plate w/Heel Loop, Right *	16 16
32	FR3108X-01	Footplate Only for Footrest & Legrest Universal Left or Right	16
33	LR7012X-01	Tension "O" Ring for Foot Plate	16
34	LR7013X-01	Screw for Foot Plate	16
35	CA3026X-01	Seat Guide Rear (black nylon)	10
36	CA3027L-01 CA3027R-01	Left Seat Guide & Arm Socket * Right Seat Guide & Arm Socket *	10 10
37	CA3028X-01	Journal Cap for Fork Stem	9
38	CA8018X-01	Pivot Link with Braket and Hardware	22
39	CA3027L-01 CA3027R-01	Lock Lever Complete, Left * Lock Lever Complet, Right *	15 15
40	LR7001L-01 LR7001R-01	Spring Only for Lock Lever, Left * Spring Only for Lock Lever, Right *	15 15
41	FM2002X-01	Cross Brace Set	21
42	LR7020L-01 LR7020R-01	Adjustment Rod Complete, Left * Adjustment Rod Complete, Right *	15 15
43	LR7003X-01	Calf Pad Bracket	15
44	LR7002X-01	Calf Pad Hinge Plate	15
45	AR9012X-01	Arm Hinge Repair Kit, Nut, Bolt, bushing, & Spacer	12
46	UP1212X-01-CL	Handle Closing Straps **	20
50	AC1514X-01	Safety Belt, for 18" Wide Chairs	23
51	CA3042X-01	Cross Brace Fame Bolt & Nut	21
52	FM3001X-01	Cross Brace Plug, set of 4	9